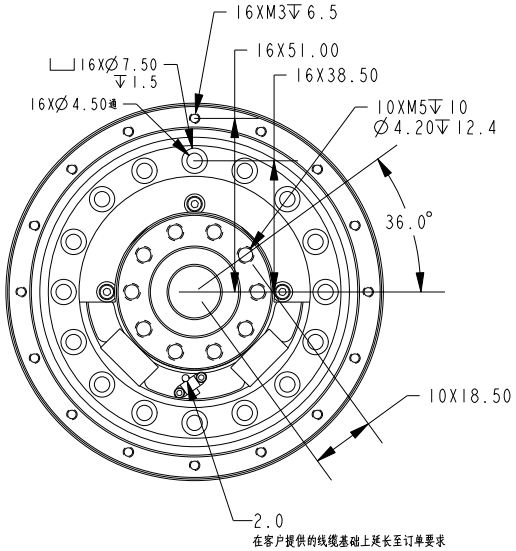

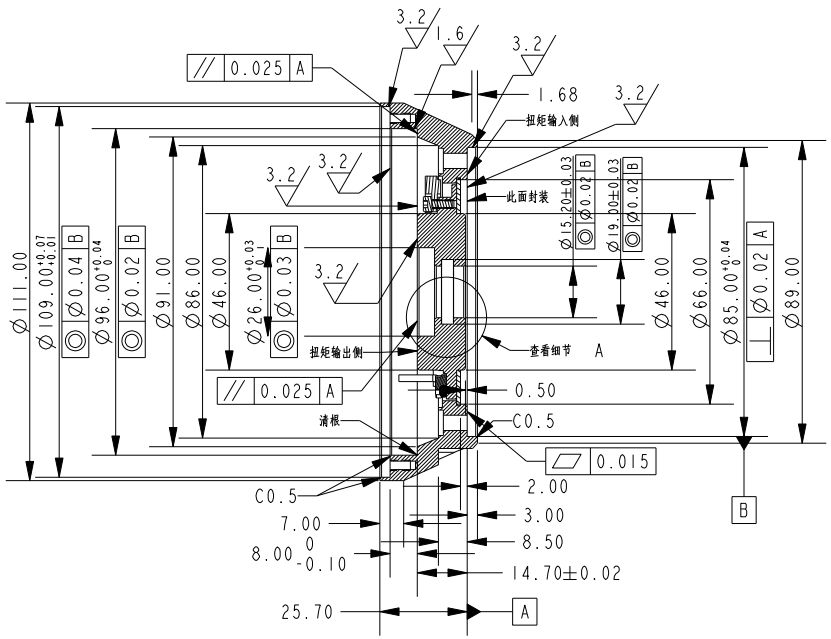

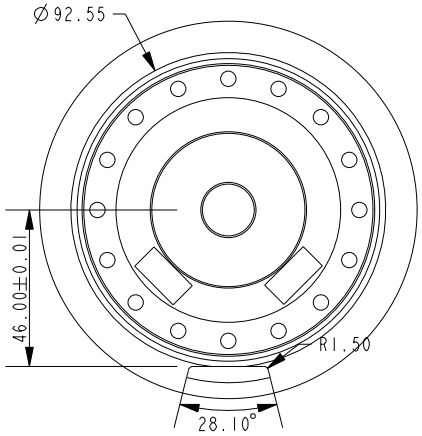

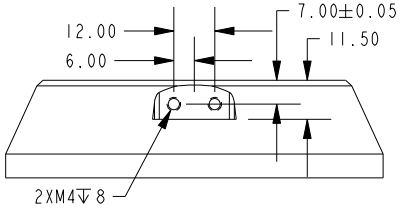

DRAWING IN THIRD ANGLE PROJECTION

NOTE: THE OVERLOAD CAPACITIES FOR BENDING MOMENT, AXIAL AND RADIAL FORCE EXCEED 300% OF THOSE USED FOR CROSSTALK MEASUREMENT

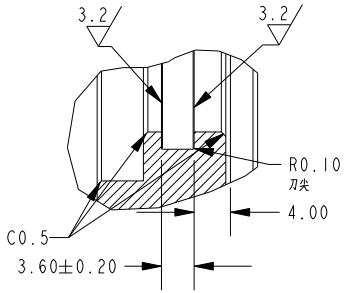

SPECIFICATIONS	
CAPACITY (Nm)	150
OVERLOAD CAPACITY (%F.S.)	300
DIGITAL OUTPUT	SPI
POWER SUPPLY (V)	4.5V-5V,25MA
BRIDGE RESISTANCE (Ω) NOMINAL	350
NON-LINEARITY (%F.S.)	0.5
HYSTERESIS (%F.S.)	0.5
OPERATING TEMP. RANGE (°C)	-20 TO +85
CROSSTALK (%F.S.)	1.0
AXIAL FORCE FOR CROSSTALK (N)	300
RADIAL FORCE FOR CROSSTALK (N)	500
BENDING MOMENT FOR CROSSTALK (Nm)	20
TORSION ANGLE (CALCULATED)	0.05°
TORSIONAL STIFFNESS (KNm/RAD)	170
BENDING STIFFNESS (KNm/RAD)	25
MASS (KG)	0.31

pin #	FUNCTION	E.Z.6222 COLOR (客户提供)		CABLE COLOR (SRI)
1	NSS	blue	CONNECT	orange
2	SCK	green		green
3	MISO	yellow		yellow
4	MOSI	white		white
5	GND	brown		black
6	+5V	grey		red

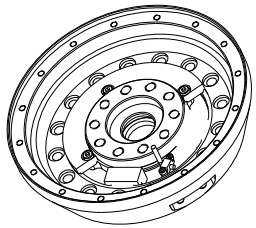

SUNRISE INSTRUMENTS

www.srisensor.com

SINGLE AXIS TORQUE LOADCELL
D111MM, 150 Nm

UNLESS OTHERWISE SPECIFIED DIMENSIONS ARE IN MM	M2212U5D	REV. 0.2