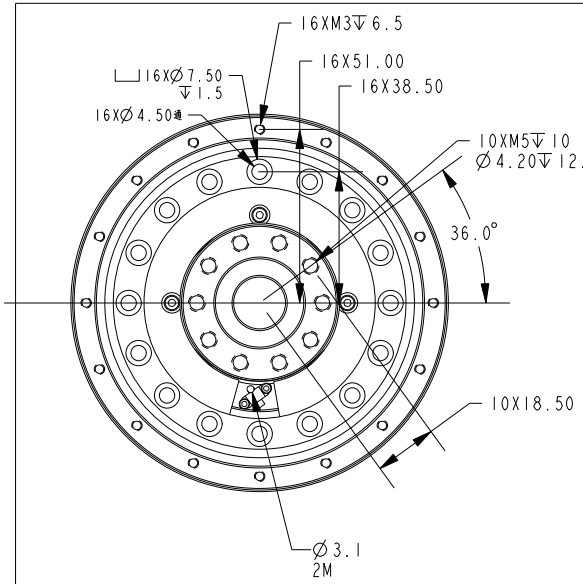

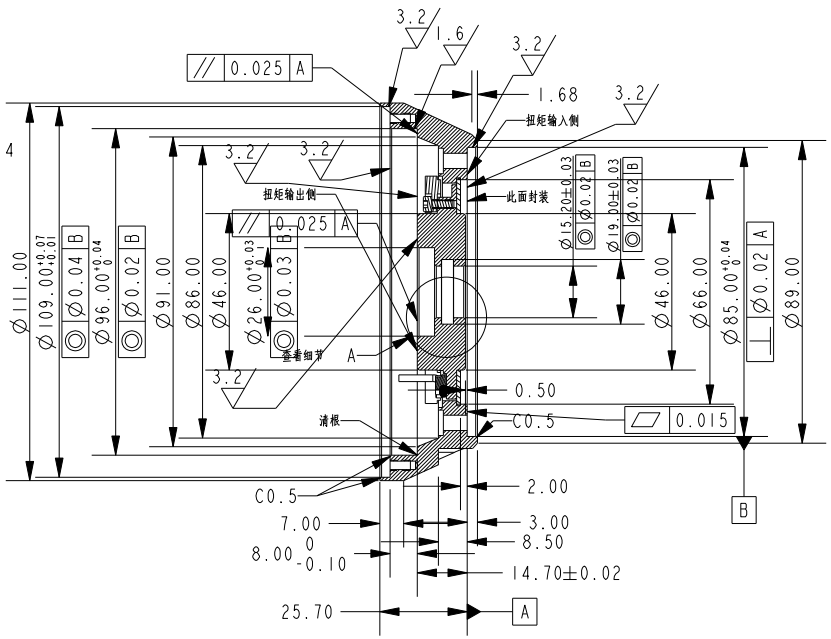

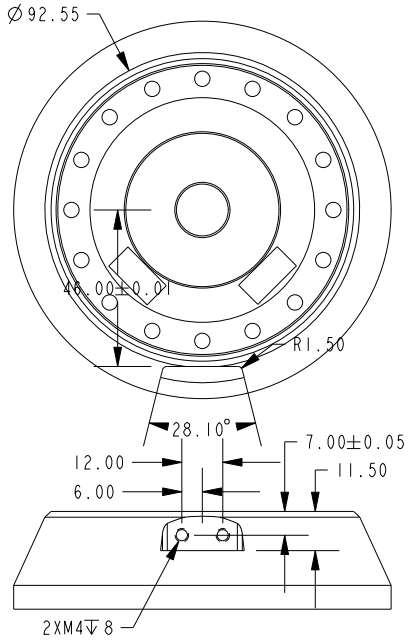

NOTE: THE OVERLOAD CAPACITIES FOR BENDING MOMENT, AXIAL AND RADIAL FORCE EXCEED 300% OF THOSE USED FOR CROSSTALK MEASUREMENT

SPECIFICATIONS	
CAPACITY (Nm)	150
OVERLOAD CAPACITY (%F.S.)	300
DIGITAL OUTPUT	RS485
POWER SUPPLY (V)	5±0.1V,250MA
BRIDGE RESISTANCE (Ω) NOMINAL	350
NON-LINEARITY (%F.S.)	0.5
HYSTERESIS (%F.S.)	0.5
OPERATING TEMP. RANGE (°C)	-20 TO +85
CROSSTALK (%F.S.)	1.0
AXIAL FORCE FOR CROSSTALK (N)	300
RADIAL FORCE FOR CROSSTALK (N)	500
BENDING MOMENT FOR CROSSTALK (Nm)	20
TORSION ANGLE (CALCULATED)	0.05°
TORSIONAL STIFFNESS (KNm/RAD)	170
BENDING STIFFNESS (KNm/RAD)	25
MASS (KG)	0.32

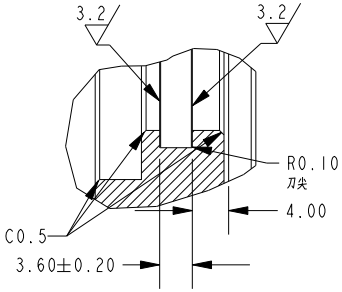

DRAWING IN THIRD ANGLE PROJECTION

WIRING CODE	
COLOR	FUNCTION
RED	+EX
GREEN	RS485-A
BLACK	GND
BROWN	RS485-B

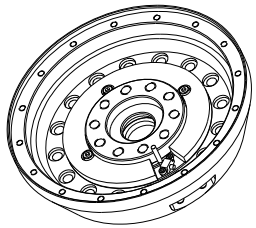

SUNRISE INSTRUMENTS

www.srisensor.com

SINGLE AXIS TORQUE LOADCELL
D111MM, 150 Nm

UNLESS OTHERWISE SPECIFIED DIMENSIONS ARE IN MM	M2212U5D1	REV. 0.1