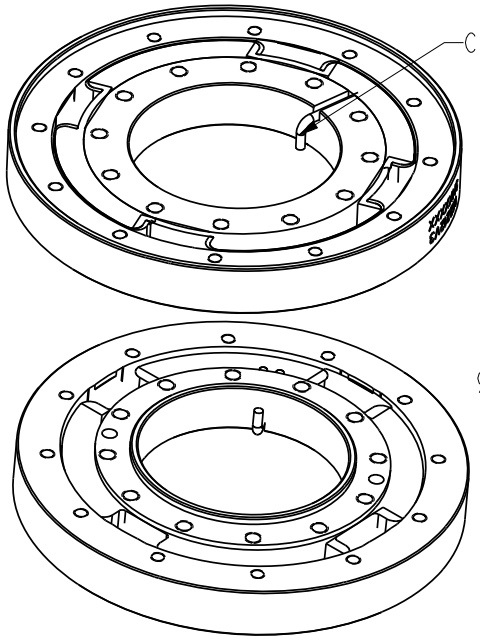

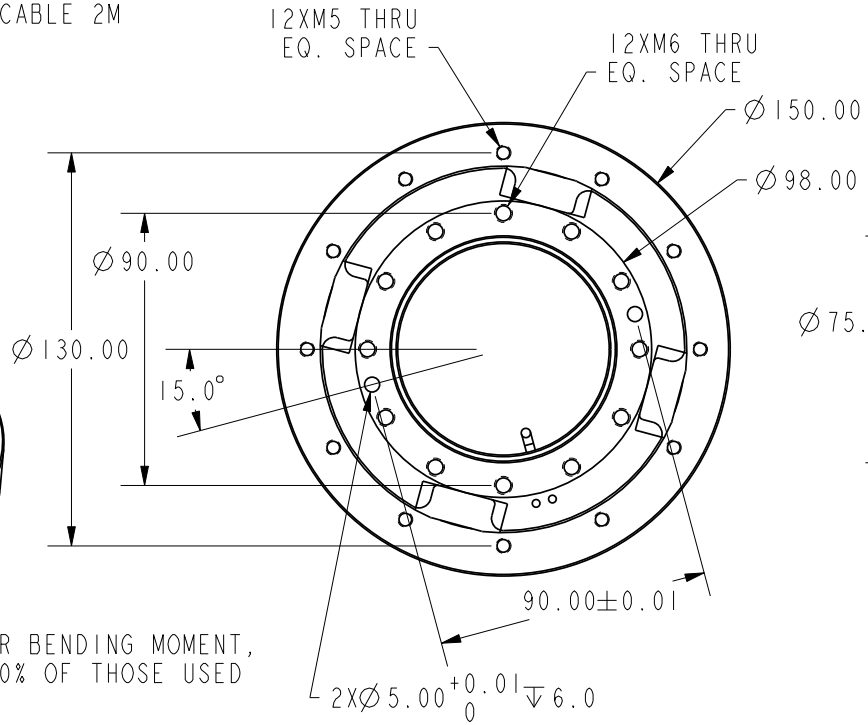

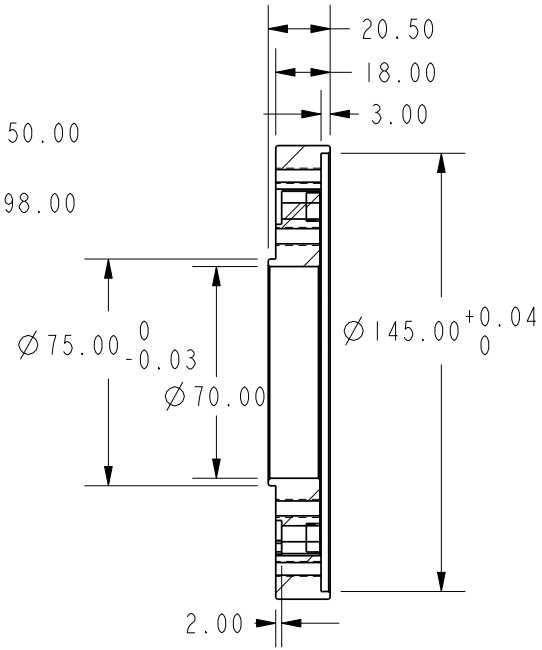

NOTE: THE OVERLOAD CAPACITIES FOR BENDING MOMENT, AXIAL AND RADIAL FORCE EXCEED 300% OF THOSE USED FOR CROSSTALK MEASUREMENT

SPECIFICATIONS	
CAPACITY (Nm)	400
OVERLOAD CAPACITY (%F.S.)	300
DIFFERENTIAL OUTPUT @ F.S. (V)	2.5±2
POWER SUPPLY (V)	4.5-5.0
BRIDGE RESISTANCE (Ω) NOMINAL	350
NON-LINEARITY	0.5
HYSTERESIS (%F.S.)	1.0
OPERATING TEMP. RANGE (°C)	-20 TO +100
CROSSTALK (%F.S.)	1.0
AXIAL FORCE FOR CROSSTALK (N)	960
RADIAL FORCE FOR CROSSTALK (N)	1600
BENDING MOMENT FOR CROSSTALK (Nm)	160
TORSION ANGLE (CALCULATED)	0.05°
TORSIONAL STIFFNESS (KNm/RAD)	458
BENDING STIFFNESS (KNm/RAD)	120
MASS (KG)	1.4

ATTENTION: RED WIRE MUST BE CONNECTED TO POSITIVE SUPPLY VOLTAGE AND BLACK TO GROUND. OTHERWISE CIRCUIT MAY GET DAMAGED!

DRAWING IN THIRD ANGLE PROJECTION

WIRING CODE	
COLOR	FUNCTION
RED	+EX
GREEN	+SIG
BLACK	GND
BROWN	-SIG

SUNRISE INSTRUMENTS

www.srisensor.com

SINGLE AXIS TORQUE LOADCELL
D150MM, 400 Nm

UNLESS OTHERWISE SPECIFIED DIMENSIONS ARE IN MM	M2212V3	REV. 0.1