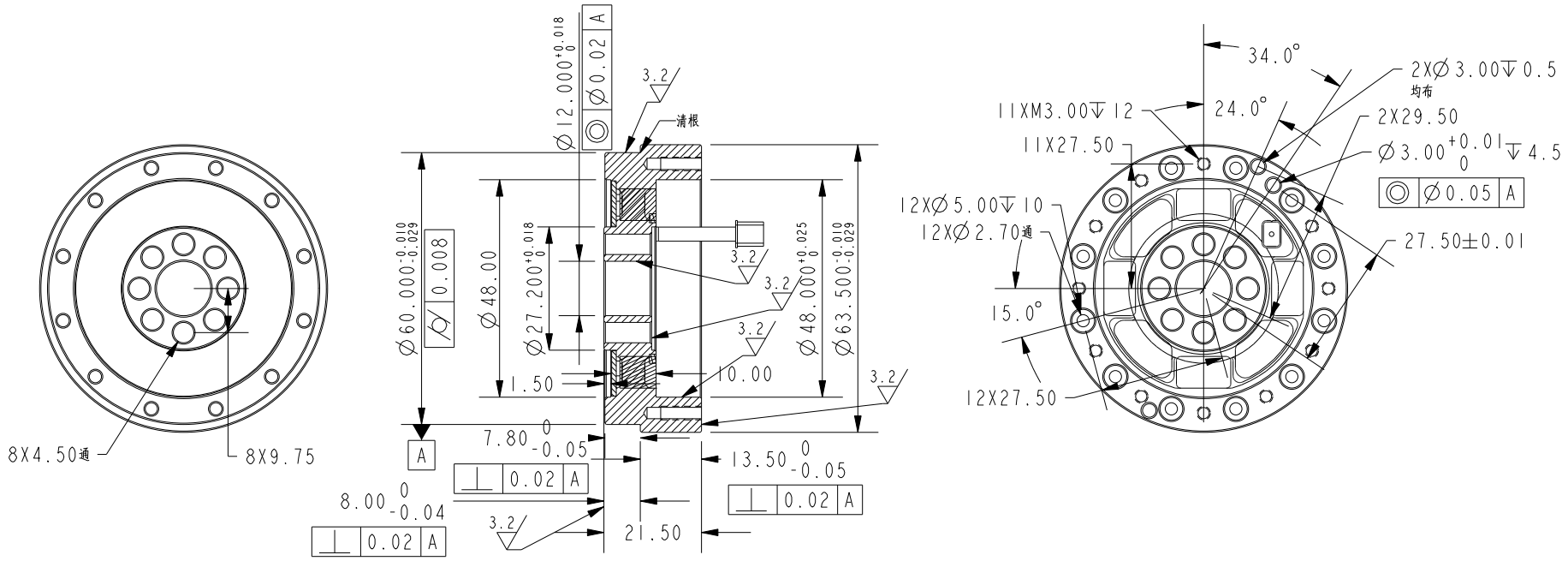

NOTE: THE OVERLOAD CAPACITIES FOR BENDING MOMENT, AXIAL AND RADIAL FORCE EXCEED 300% OF THOSE USED FOR CROSSTALK MEASUREMENT

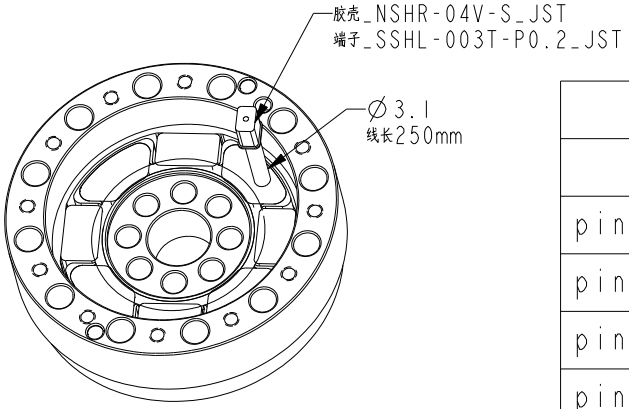

SPECIFICATIONS	
CAPACITY (Nm)	60
OVERLOAD CAPACITY (%F.S.)	300
DIFFERENTIAL OUTPUT @ F.S. (V)	2.5±2
POWER SUPPLY (V)	5V
BRIDGE RESISTANCE (Ω) NOMINAL	700
NON-LINEARITY (%F.S.)	0.5
HYSTERESIS (%F.S.)	1.0
OPERATING TEMP. RANGE (°C)	-20 TO +85
CROSSTALK (%F.S.)	1.0
AXIAL FORCE FOR CROSSTALK (N)	120
RADIAL FORCE FOR CROSSTALK (N)	240
BENDING MOMENT FOR CROSSTALK (Nm)	10
TORSION ANGLE (CALCULATED)	0.05°
TORSIONAL STIFFNESS (KNm/RAD)	69
BENDING STIFFNESS (kNm/RAD)	10
MASS (KG)	0.28

Pin Definition	
pin #	FUNCTION
pin1	tor in2
pin2	tor in1
pin3	GND
pin4	5V

SUNRISE INSTRUMENTS

www.srisensor.com

DUAL CHANNEL TORQUE LOADCELL
D63.5MM, 60 Nm

UNLESS OTHERWISE SPECIFIED DIMENSIONS ARE IN MM	M2212Z1	REV. 0.1