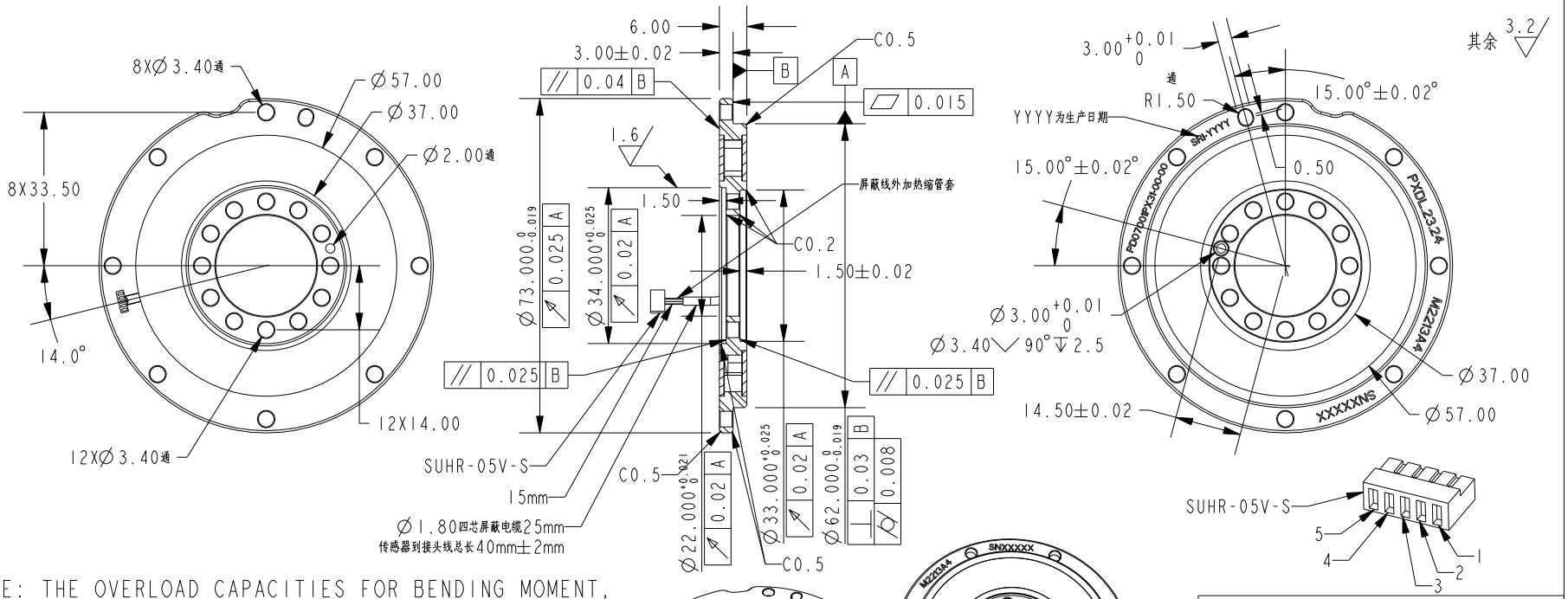

NOTE: THE OVERLOAD CAPACITIES FOR BENDING MOMENT, AXIAL AND RADIAL FORCE EXCEED 300% OF THOSE USED FOR CROSSTALK MEASUREMENT

SPECIFICATIONS

CAPACITY (Nm)	100
OVERLOAD CAPACITY (%F.S.)	250
OUTPUT @ F.S. (mv/V)	1.5±0.2
POWER SUPPLY (V)	3.5-12
BRIDGE RESISTANCE (Ω) NOMINAL	1050
NON-LINEARITY (%F.S.)	0.5
HYSTERESIS (%F.S.)	1.0
OPERATING TEMP. RANGE (°C)	-20 TO +85
CROSSTALK (%F.S.)	1.0
AXIAL FORCE FOR CROSSTALK (N)	200
RADIAL FORCE FOR CROSSTALK (N)	400
BENDING MOMENT FOR CROSSTALK (Nm)	20
BENDING STIFFNESS (KNm/RAD)	23
TORSION ANGLE (CALCULATED)	0.05°
TORSIONAL STIFFNESS (KNm/RAD)	114
MASS (KG)	0.1

TEMPERATURE DRIFT: 0.5% FS PER 10 °C
FREE AIR RESONANT FREQUENCY: > 1000 HZ
ZERO SHIFT < 5% FS
1,000,000 CYCLES, MZ ±35NM PEAK,2Hz
FATIGUE LIFE AFTER ZERO ADJUSTMENT
5,000,000 CYCLES, MZ ±35NM PEAK,2Hz
5,000,000 CYCLES, FZ 35N PEAK, 2Hz

DRAWING IN THIRD ANGLE PROJECTION

WIRING CODE

	COLOR	FUNCTION
1	RED	+EX
2	WHITE	-SIG
3	GREEN	+SIG
4	BLACK	GND
5	SHIELDING WIRE	

SUNRISE INSTRUMENTS
www.srisensor.com

ROBOT JOINT TORQUE LOADCELL
D73MM,100 Nm

UNLESS OTHERWISE SPECIFIED DIMENSIONS ARE IN MM

M2213A4

REV. 0.4