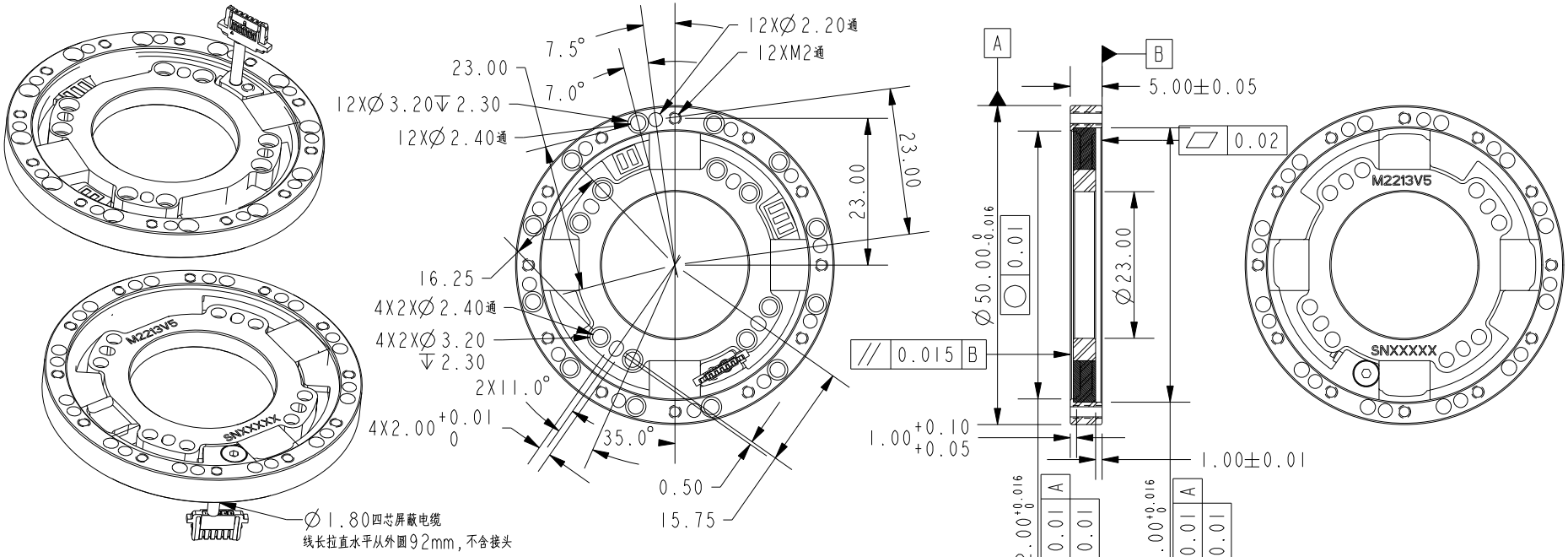

NOTE: THE OVERLOAD CAPACITIES FOR BENDING MOMENT, AXIAL AND RADIAL FORCE EXCEED 300% OF THOSE USED FOR CROSSTALK MEASUREMENT

SPECIFICATIONS

CAPACITY (Nm)	30
OVERLOAD CAPACITY (%F.S.)	100
OUTPUT @ F.S.NOMINAL	1.8 MV/V
POWER SUPPLY (V)	4.5-5.0
BRIDGE RESISTANCE (Ω) NOMINAL	700
NON-LINEARITY	0.5
HYSTERESIS (%F.S.)	1.0
OPERATING TEMP. RANGE (°C)	-20 TO +100
CROSSTALK (%F.S.)	1.0
AXIAL FORCE FOR CROSSTALK (N)	60
RADIAL FORCE FOR CROSSTALK (N)	120
BENDING MOMENT FOR CROSSTALK (Nm)	30
TORSION ANGLE (CALCULATED)	0.05°
TORSIONAL STIFFNESS (KNm/RAD)	34
BENDING STIFFNESS (KNm/RAD)	6
MASS (KG)	0.035

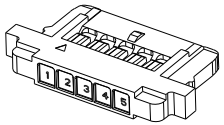

ATTENTION: RED WIRE MUST BE CONNECTED TO POSITIVE SUPPLY VOLTAGE AND BLACK TO GROUND. OTHERWISE CIRCUIT MAY GET DAMAGED!

DRAWING IN THIRD ANGLE PROJECTION

WIRING CODE

	COLOR	FUNCTION
1	RED	+EX
2	WHITE	-SIG
3	GREEN	+SIG
4	BLACK	GND
5	SHIELDING WIRE	

SUNRISE INSTRUMENTS

www.srisensor.com

SINGLE AXIS TORQUE LOADCELL
D50MM, 30 Nm

UNLESS OTHERWISE SPECIFIED DIMENSIONS ARE IN MM	M2213V5	REV. A