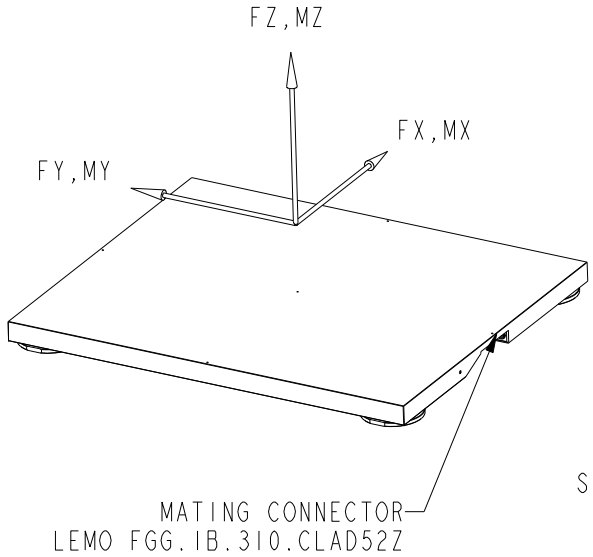

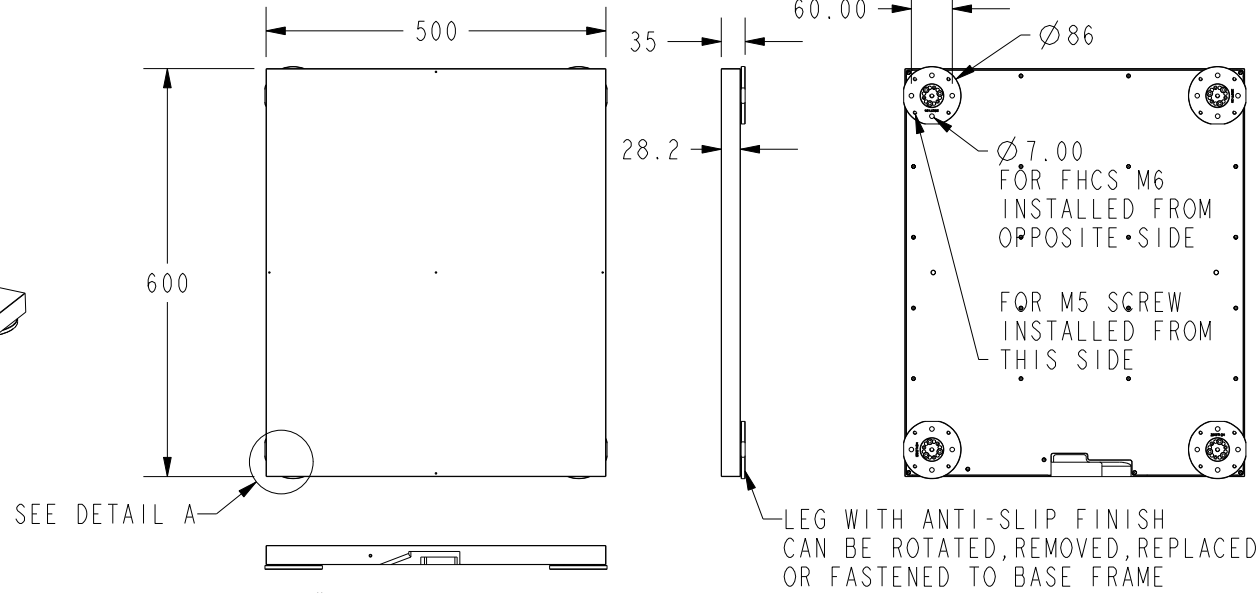

POSITIVE OUTPUT WHEN THE LOADING IS APPLIED TO FORCE PLATE, PER COORDINATE SYSTEM AS SHOWN

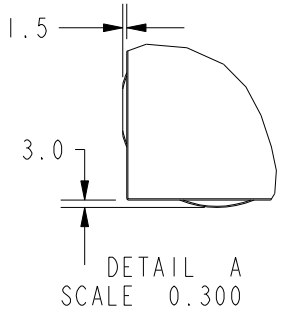

TRIGGER LINES ARE USED TO SYNCHRONIZE DATA FROM MULTIPLE FORCE PLATE.

EHTERNET OUTPUT, SAMPLING RATE 2K

	Fx	Fy	Fz	Mx	My	Mz
CAPACITY	2.5kN	2.5kN	5kN	1100Nm	1300Nm	500Nm

MATING CONNECTOR LEMO FGG.1B.310.CLAD52Z

PIN	FUNCTION	COLOR	PIN	FUNCTION	COLOR
1	+24V	ORANGE	6	RXN	GREEN
2	GND	BLACK	7	TRIGGER+	GREY
3	TXP	BLUE	8	TRIGGER-	BROWN
4	TXN	WHITE	9	RX	
5	RXP	YELLOW	10	TX	

SPECIFICATIONS

OVERLOAD CAPACITY (%F.S.)	250
FREE AIR RESONANT FREQ. (HZ.) - X,Y	400
FREE AIR RESONANT FREQ. (HZ.) - Z	200
CROSSTALK (%F.S.)	0.5
NON-LINEARITY (%F.S.)	0.3
HYSTERESIS (%F.S.)	0.3
MAX. COP ERROR (mm) - AX, AY	2.0
OPERATING TEMPERATURE RANGE (°C)	-20 TO 70
INGRESS PROTECTION	IP52
MASS (KG)	10.2

SUNRISE INSTRUMENTS

www.srisensor.com

6 AXIS FORCE PLATE 500X600MM,
LIGHT WEIGHT, 5KN, ETHERNET OUTPUT

UNLESS OTHERWISE SPECIFIED DIMENSIONS ARE IN MM

M3612T1

REV. A