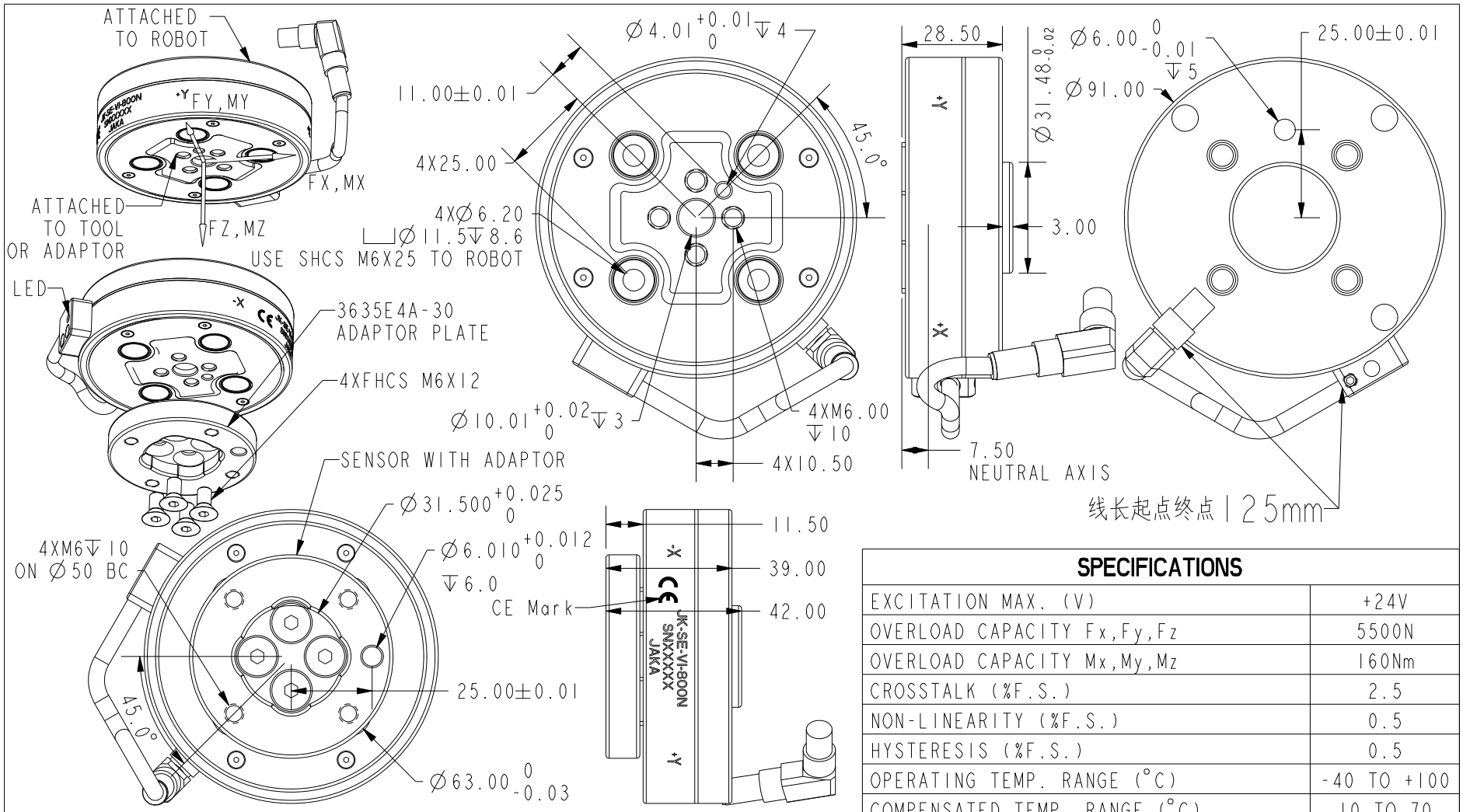

POSITIVE OUTPUT WHEN THE LOAD IS APPLIED TO THE TOOL SIDE PER COORDINATE SYSTEM AS SHOWN

SENSOR HAS INTERNAL AMPLIFIER AND DATA AQUISITION SYSTEM.

LED STATUS	SENSOR STATUS
OFF	POWER OFF
FLIKER	WORK PROPERLY
ON	ABNORMAL

CONNECTOR PIN ASSIGNMENT

PIN #	FUNCTION	PIN #	FUNCTION
1 RED	+24V	5 PINK	RS485B
2 BLUE	NC	6 BROWN	NA
3 GREEN	NC	7 WHITE	NA
4 YELLOW	RS485A	8 GREY	GND

SPECIFICATIONS

EXCITATION MAX. (V)	+24V
OVERLOAD CAPACITY Fx,Fy,Fz	5500N
OVERLOAD CAPACITY Mx,My,Mz	160Nm
CROSSTALK (%F.S.)	2.5
NON-LINEARITY (%F.S.)	0.5
HYSTERESIS (%F.S.)	0.5
OPERATING TEMP. RANGE (°C)	-40 TO +100
COMPENSATED TEMP. RANGE (°C)	10 TO 70
MASS (KG) NOT INCLUDING ADAPTOR	0.66

	Fx(N)	Fy(N)	Fz(N)	Mx(Nm)	My(Nm)	Mz(Nm)
CAPACITY	800	800	800	40	40	40
RESOLUTION	0.18	0.18	0.18	0.003	0.003	0.003

SRI-X **SUNRISE INSTRUMENTS**
www.srisensor.com

SIX AXIS CIRCULAR LOAD CELL
D91MM F800N, DIGITAL (485) OUTPUT

UNLESS OTHERWISE SPECIFIED DIMENSIONS ARE IN MM

M3635E4A

REV. G