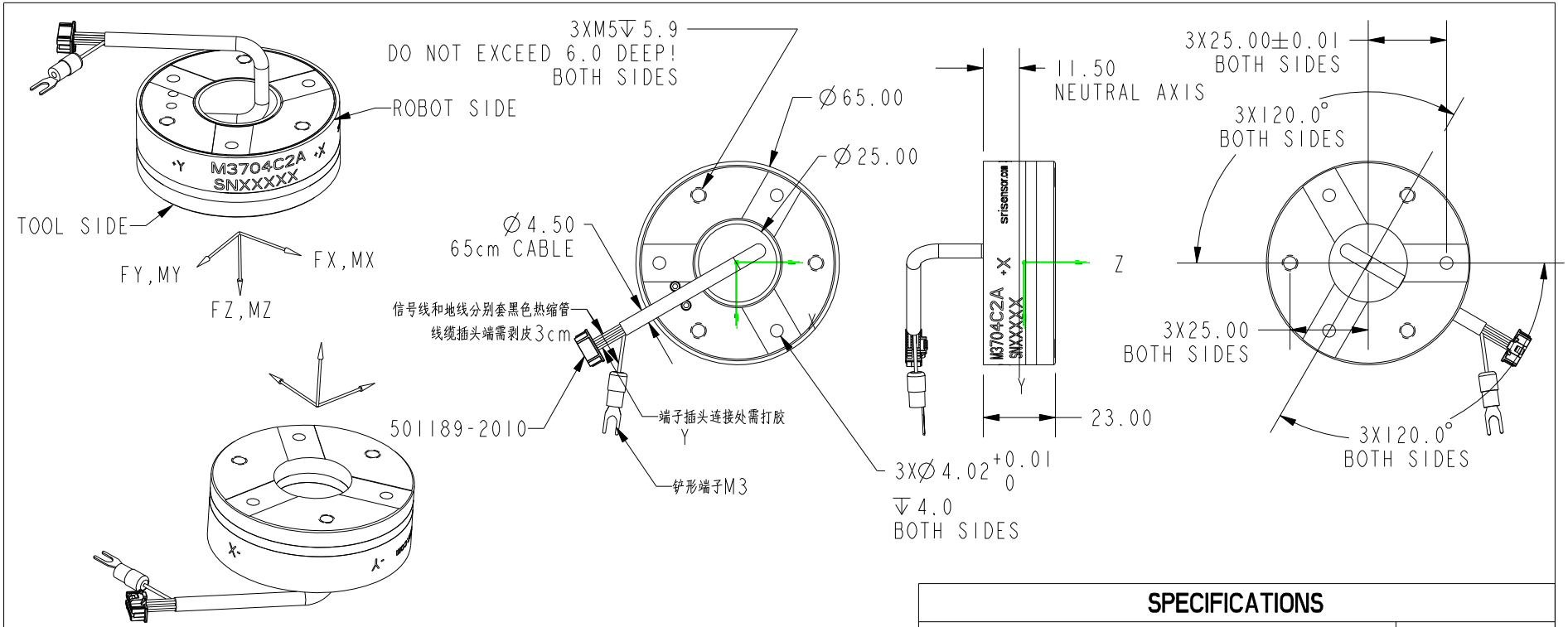

POSITIVE OUTPUT WHEN THE LOAD IS APPLIED TO THE TOOL SIDE
PER COORDINATE SYSTEM AS SHOWN

THE OUTPUTS ARE NOT STRUCTURALLY DECOUPLED
A 6X6 DECOUPLED MATRIX IS PROVIDED TO OBTAIN EACH COMPONENT

	Fx	Fy	Fz	Mx	My	Mz
CAPACITY (N/Nm)	200	200	400	11	11	11
OUTPUT (mV/V)	COUPLED					
BRIDGE RES. (Ω)	700	700	700	700	700	700

SPECIFICATIONS

EXCITATION MAX. (V)	5
OVERLOAD CAPACITY (%F.S.)	300
FREE AIR RESONANT FREQ. (HZ.)	4500
CROSSTALK (%F.S.)	2.5
NON-LINEARITY (%F.S.)	0.5
HYSTERESIS (%F.S.)	0.5
OPERATING TEMP. RANGE (°C)	-40 TO +100
COMPENSATED TEMP. RANGE (°C)	10 TO 70
MASS (KG)	0.1

WIRING CODE - TWISTED PAIR

FUNC	CHN1	CHN2	CHN3	CHN4	CHN5	CHN6
+SIG	WHITE(BROWN)	ORG(BROWN)	BLUE(BROWN)	YEL(BROWN)	RED(BROWN)	WHITE(BLACK)
-SIG	BROWN(WHITE)	BROWN(ORG)	BROWN(BLUE)	BROWN(YEL)	BROWN(RED)	BLACK(WHITE)
+EXC	ORG(BLACK)	BLACK(ORG)	BLUE(BLACK)	BLACK(BLUE)	RED(BLACK)	BLACK(RED)
-EXC	YELLOW(BLACK)			BLACK(YELLOW)		

"YEL"="YELLOW", "ORG"="ORANGE", "WHITE(BROWN)" = WHITE CABLE IN WHITE/BROWN PAIR

SUNRISE INSTRUMENTS

www.srisensor.com

SIX AXIS CIRCULAR LOAD CELL, COUPLED
D65MM F200N

UNLESS OTHERWISE SPECIFIED DIMENSIONS ARE IN MM	M3704C2A	REV. A