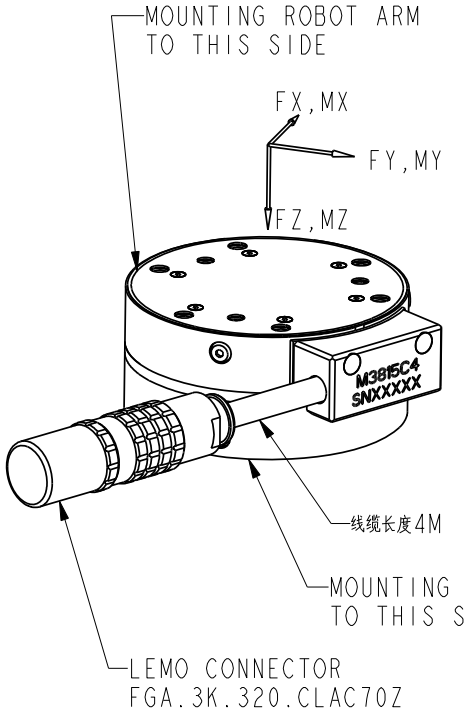

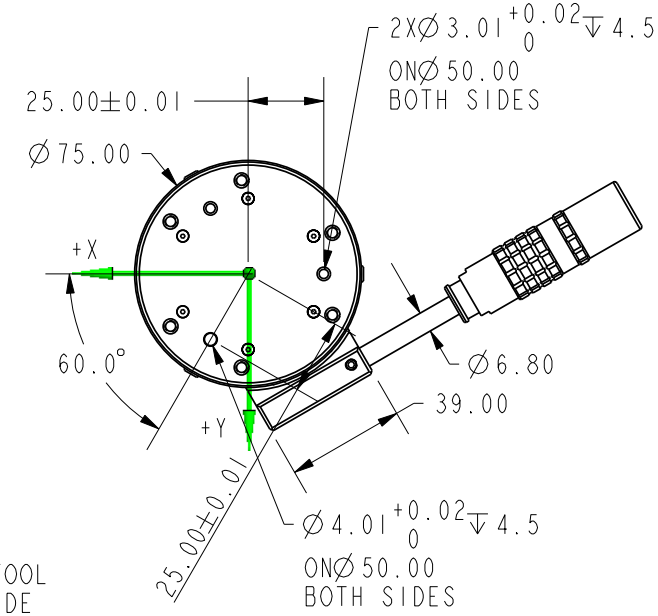

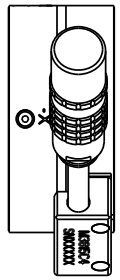

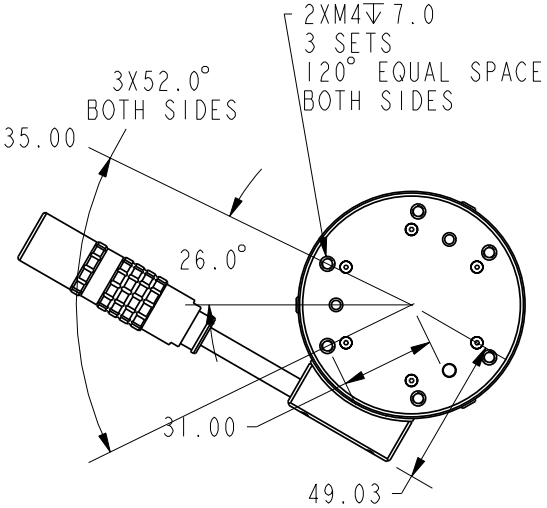

THE OUTPUT IS POSITIVE WHEN THE LOAD IS APPLIED TO THE TOOL SIDE PER COORDINATE AS SHOWN. A 6X6 MATRIX IS PROVIDED FOR DECOUPLING

	Fx	Fy	Fz	Mx	My	Mz
CAPACITY (N/Nm)	130	130	130	10	10	10
OUTPUT @ F.S.(V)	5	5	5	5	5	5

LEMO PIN ASSIGNMENT - TWISTED PAIR COLOR CODES

PIN #	FUNCTION	PIN #	FUNCTION	PIN #	FUNCTION
1	FX+ YL(WT)	6	FZ- WT(RD)	10	MY- WT(BL)
2	FX- WT(YL)	7	MX+ OG(WT)	11	MZ+ YL(BK)
3	FY+ GN(WT)	8	MX- WT(OG)	12	MZ- BK(YL)
4	FY- WT(GN)	9	MY+ BL(WT)	17	NA
5	FZ+ RD(WT)	18	GND Red&Black Green&Black		
19		20	+24V BL(BK) Orange&Black		

WT=WHITE, BN=BROWN, OG=ORANGE, BL=BLUE, YL=YELLOW, RD=RED, BK=BLACK,GN=Green

SPECIFICATIONS

EXCITATION MAX. (V)	±15
OVERLOAD CAPACITY (%F.S.)	1000
LOWEST FREE AIR RESONANT FREQ. (HZ.)	750
CROSSTALK - WITH ADJUSTMENT (%F.S.)	2
NON-LINEARITY (%F.S.)	0.5
HYSTERESIS (%F.S.)	0.5
OPERATING TEMP. RANGE (°C)	-40 TO +100
COMPENSATED TEMP. RANGE (°C)	10 TO 70
MASS (KG)	0.41

SUNRISE INSTRUMENTS

www.srisensor.com

SIX AXIS LOADCELL WITH OL STOPS
D75MM F130N, IP60

UNLESS OTHERWISE SPECIFIED DIMENSIONS ARE IN MM

M3815C4

REV. B