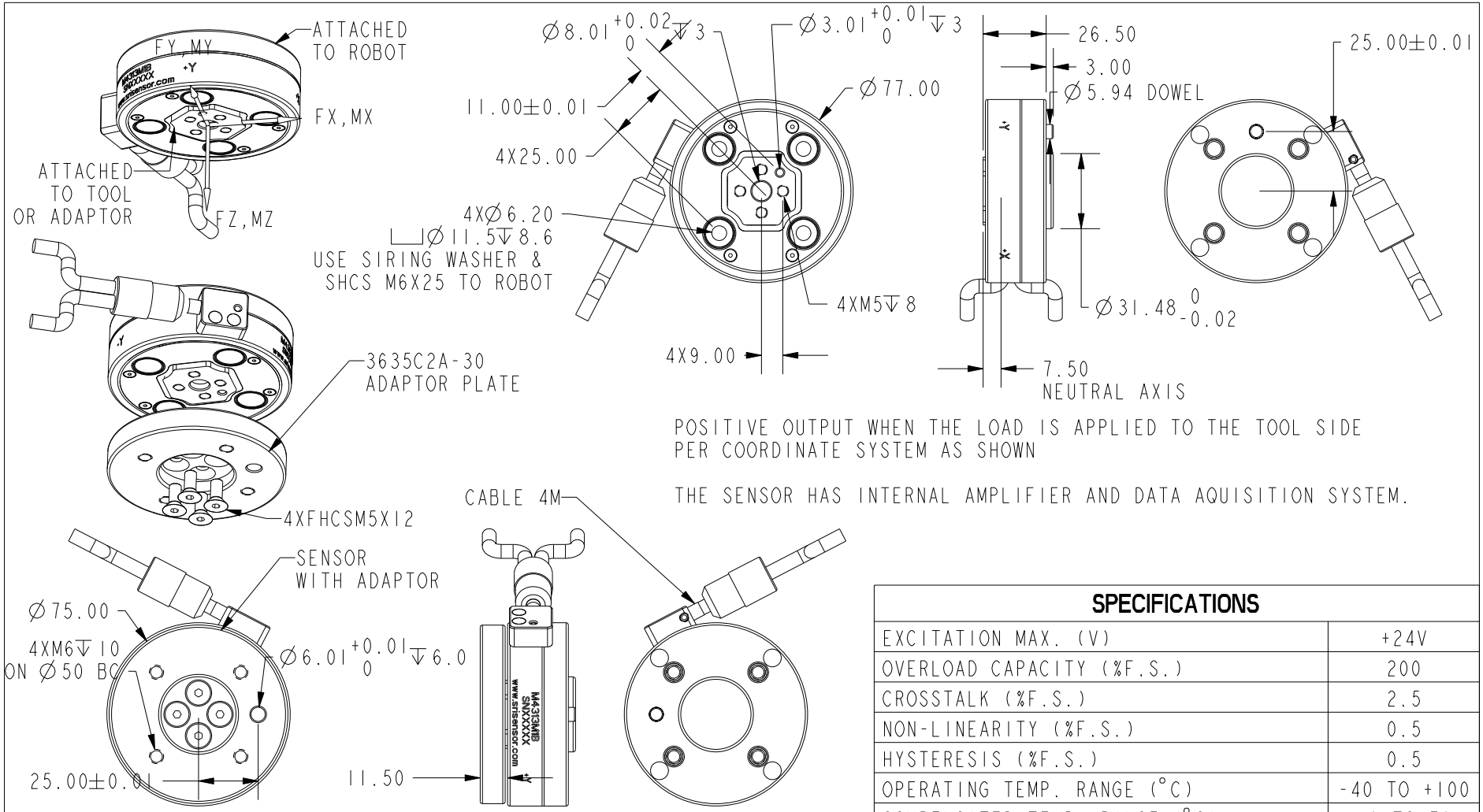


POSITIVE OUTPUT WHEN THE LOAD IS APPLIED TO THE TOOL SIDE PER COORDINATE SYSTEM AS SHOWN

THE SENSOR HAS INTERNAL AMPLIFIER AND DATA AQUISITION SYSTEM.

| | Fx | Fy | Fz | Mx | My | Mz |
|---|---|---|---|---|---|---|
| CAPACITY (N/Nm) | 50 | 50 | 50 | 4Nm | 4Nm | 4Nm |
| BRIDGE RES. (Ω) | 350 | 350 | 350 | 350 | 350 | 350 |

## SPECIFICATIONS

| | |
|---|---|
| EXCITATION MAX. (V) | +24V |
| OVERLOAD CAPACITY (%F.S.) | 200 |
| CROSSTALK (%F.S.) | 2.5 |
| NON-LINEARITY (%F.S.) | 0.5 |
| HYSTERESIS (%F.S.) | 0.5 |
| OPERATING TEMP. RANGE (°C) | -40 TO +100 |
| COMPENSATED TEMP. RANGE (°C) | 10 TO 70 |
| MASS (KG) NOT INCLUDING ADAPTOR | 0.23 |

## CONNECTOR PIN ASSIGNMENT

| COLOR | FUNCTION | COLOR | FUNCTION |
|---|---|---|---|
| 1 BLUE | +24V | 5 WHITE/GREEN | RDP |
| 2 WHITE/BLUE | GND | 6 GREEN | RDN |
| 3 WHITE/ORANGE | TDP | 7 WHITE/BROWN | RX |
| 4 ORANGE | TDN | 8 BROWN | TX |

**SUNRISE INSTRUMENTS**

**www.srisensor.com**

SIX AXIS CIRCULAR LOAD CELL
D77MM F50N, ETHERNET TCP

UNLESS OTHERWISE SPECIFIED DIMENSIONS ARE IN MM

M4313MIB

REV. A