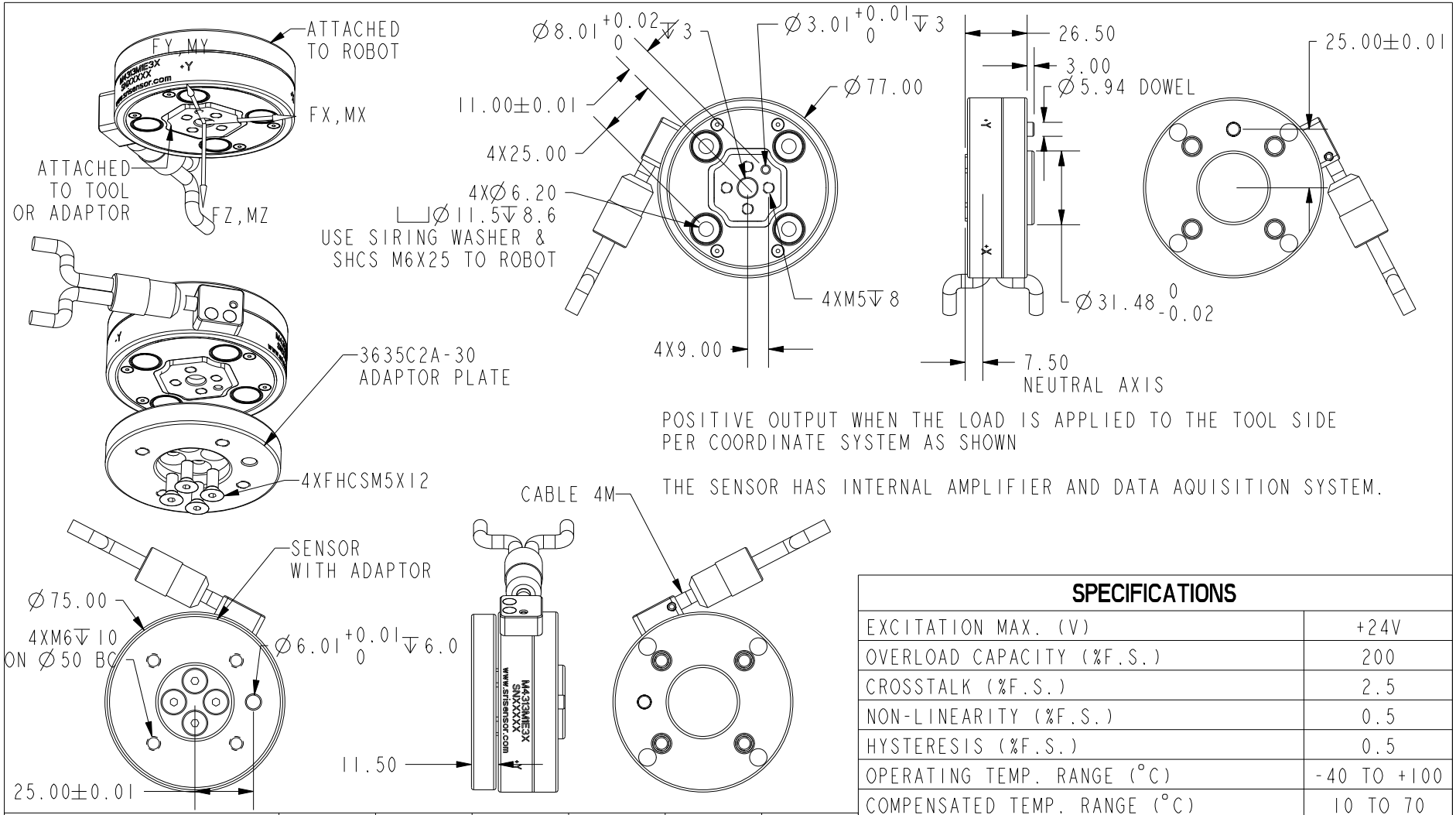

POSITIVE OUTPUT WHEN THE LOAD IS APPLIED TO THE TOOL SIDE PER COORDINATE SYSTEM AS SHOWN

THE SENSOR HAS INTERNAL AMPLIFIER AND DATA AQUISITION SYSTEM.

	Fx	Fy	Fz	Mx	My	Mz
CAPACITY (N/Nm)	50	50	50	N/A	N/A	N/A
BRIDGE RES. (Ω)	350	350	350			

CONNECTOR PIN ASSIGNMENT

COLOR	FUNCTION	COLOR	FUNCTION
1 BLUE	+24V	5 WHITE/GREEN	RDP
2 WHITE/BLUE	GND	6 GREEN	RDN
3 WHITE/ORANGE	TDP	7 WHITE/BROWN	RX
4 ORANGE	TDN	8 BROWN	TX

SPECIFICATIONS

EXCITATION MAX. (V)	+24V
OVERLOAD CAPACITY (%F.S.)	200
CROSSTALK (%F.S.)	2.5
NON-LINEARITY (%F.S.)	0.5
HYSTERESIS (%F.S.)	0.5
OPERATING TEMP. RANGE (°C)	-40 TO +100
COMPENSATED TEMP. RANGE (°C)	10 TO 70
MASS (KG) NOT INCLUDING ADAPTOR	0.23

SUNRISE INSTRUMENTS

www.srisensor.com

3 AXIS CIRCULAR LOAD CELL
D77MM F50N, ETHERCAT

UNLESS OTHERWISE SPECIFIED DIMENSIONS ARE IN MM	M4313MIE3X	REV. A