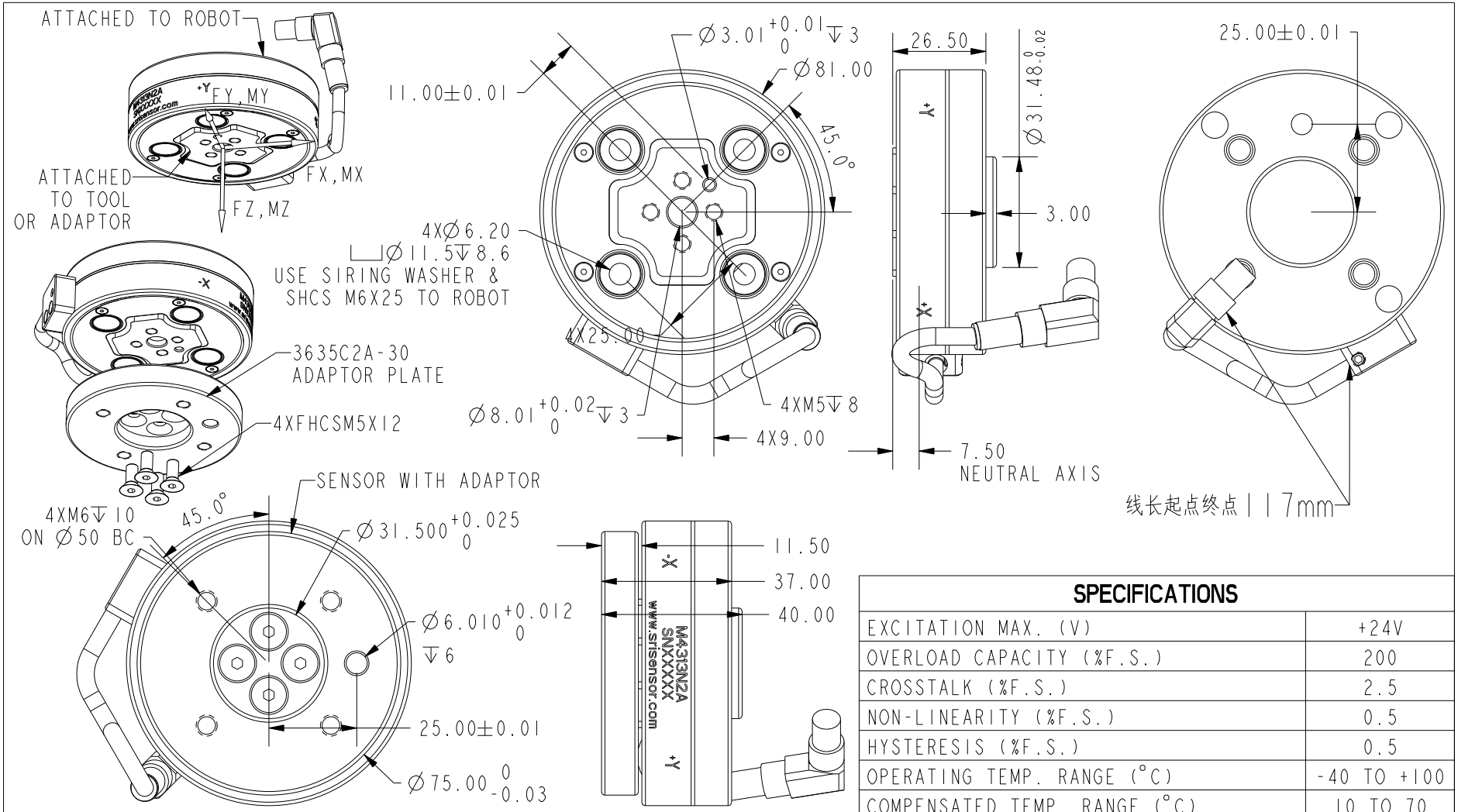

POSITIVE OUTPUT WHEN THE LOAD IS APPLIED TO THE TOOL SIDE PER COORDINATE SYSTEM AS SHOWN

SENSOR HAS INTERNAL AMPLIFIER AND DATA AQUISITION SYSTEM.

CONNECTOR PIN ASSIGNMENT

PIN #	FUNCTION	PIN #	FUNCTION
1 RED	+24V	5 PINK	RS485B
2 BLUE	NC	6 BROWN	NA
3 GREEN	NC	7 WHITE	NA
4 YELLOW	RS485A	8 GREY	GND

SPECIFICATIONS

EXCITATION MAX. (V)	+24V
OVERLOAD CAPACITY (%F.S.)	200
CROSSTALK (%F.S.)	2.5
NON-LINEARITY (%F.S.)	0.5
HYSTERESIS (%F.S.)	0.5
OPERATING TEMP. RANGE (°C)	-40 TO +100
COMPENSATED TEMP. RANGE (°C)	10 TO 70
MASS (KG) NOT INCLUDING ADAPTOR	0.38

	Fx (N)	Fy (N)	Fz (N)	Mx (Nm)	My (Nm)	Mz (Nm)
CAPACITY	200	200	200	8	8	8
RESOLUTION	0.05	0.05	0.05	0.000842	0.000842	0.000842

SRI-X **SUNRISE INSTRUMENTS**
www.srisensor.com

SIX AXIS CIRCULAR LOAD CELL
D81MM F200N, DIGITAL (485) OUTPUT

UNLESS OTHERWISE SPECIFIED DIMENSIONS ARE IN MM

M4313N2A

REV. A