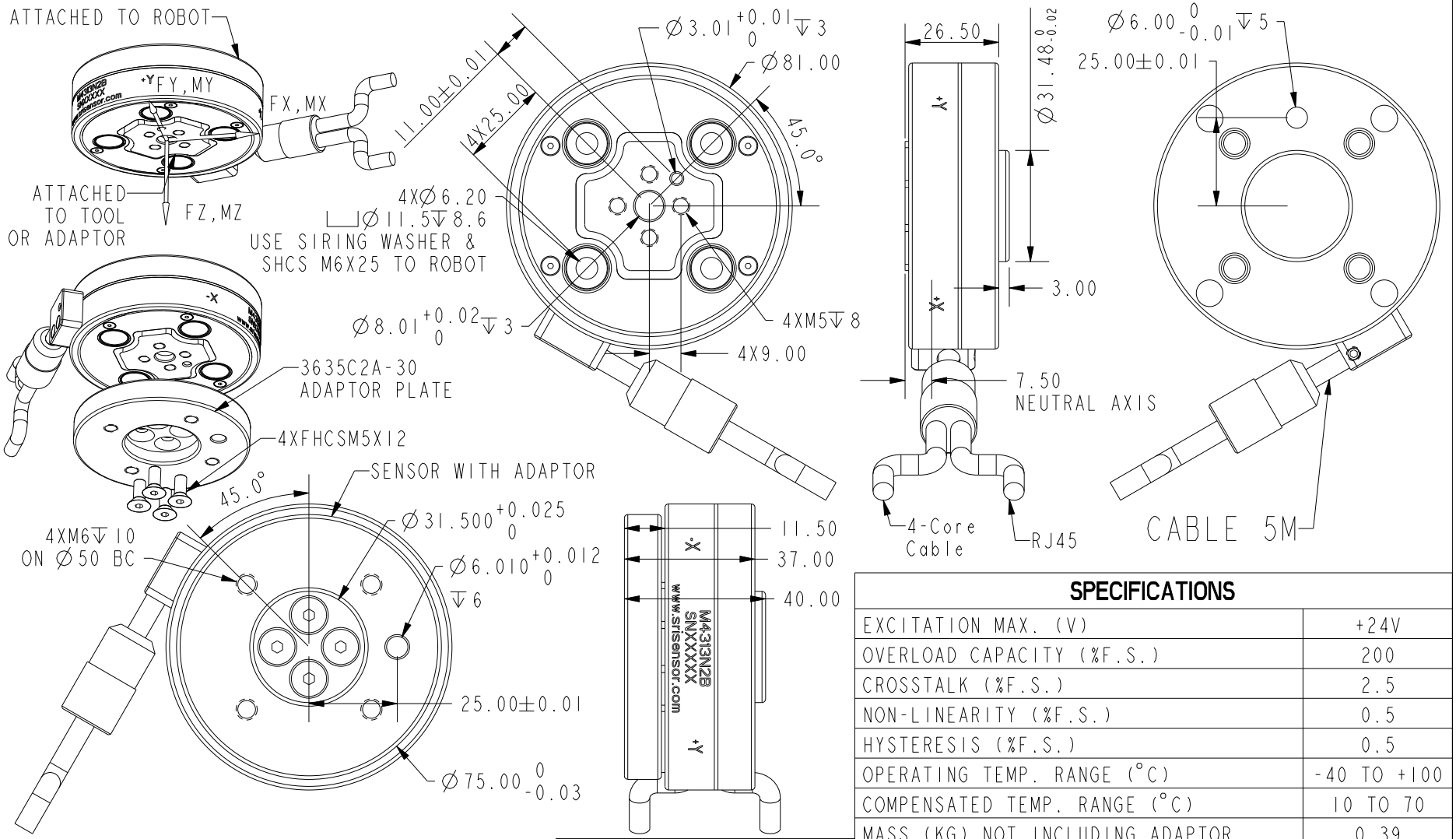

POSITIVE OUTPUT WHEN THE LOAD IS APPLIED TO THE TOOL SIDE
PER COORDINATE SYSTEM AS SHOWN

SENSOR HAS INTERNAL AMPLIFIER AND DATA AQUISITION SYSTEM.

WIRING CODE

COLOR	FUNCTION
BLUE	+24V
WHITE/BLUE	GND
WHITE/BROWN	RX
BROWN	TX

SPECIFICATIONS

EXCITATION MAX. (V)	+24V
OVERLOAD CAPACITY (%F.S.)	200
CROSSTALK (%F.S.)	2.5
NON-LINEARITY (%F.S.)	0.5
HYSTERESIS (%F.S.)	0.5
OPERATING TEMP. RANGE (°C)	-40 TO +100
COMPENSATED TEMP. RANGE (°C)	10 TO 70
MASS (KG) NOT INCLUDING ADAPTOR	0.39

	Fx (N)	Fy (N)	Fz (N)	Mx (Nm)	My (Nm)	Mz (Nm)
CAPACITY	200	200	200	8	8	8
RESOLUTION	0.05	0.05	0.05	0.000842	0.000842	0.000842

SRI-X **SUNRISE INSTRUMENTS**
www.srisensor.com

SIX AXIS CIRCULAR LOAD CELL
D81MM F200N, Ethernet TCP/IP

UNLESS OTHERWISE SPECIFIED DIMENSIONS ARE IN MM

M4313N2B

REV. A