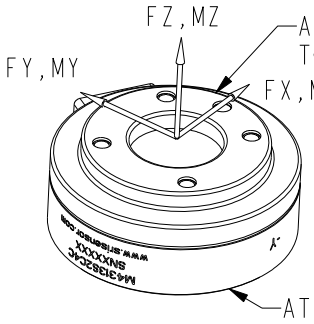

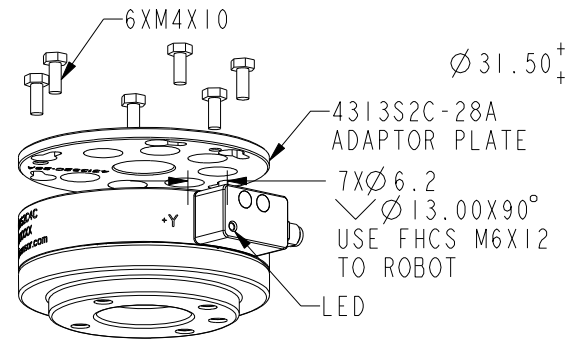

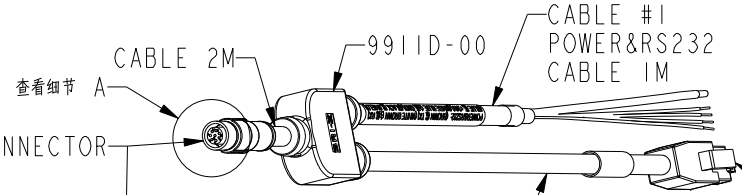

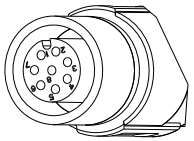

细节 A
1.500

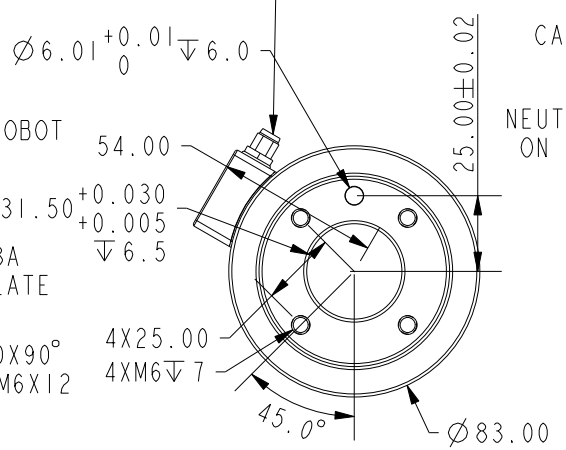

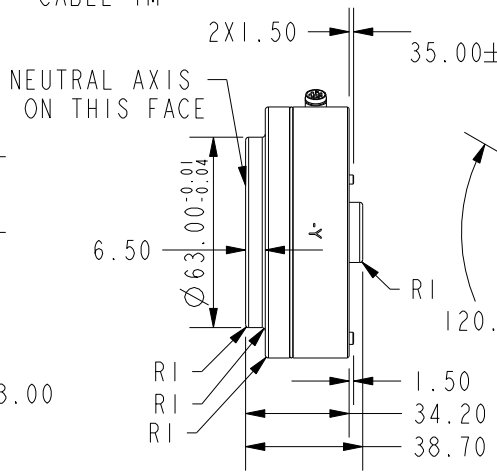

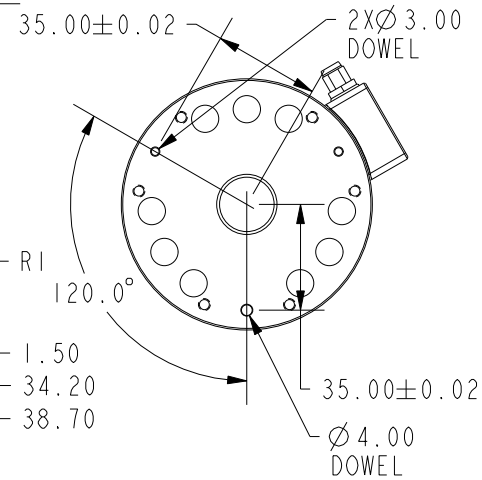

M8 CONNECTOR					
NO1.	FUNCTION	COLOR	NO1.	FUNCTION	COLOR
1	+24V	ORANGE	5	RXP	YELLOW
2	GND	BLACK	6	RXN	GREEN
3	TXP	BLUE	7	RX	GREY
4	TXN	WHITE	8	TX	BROWN

CABLE #1	
COLOR	FUNCTION
BLUE	+24V
WHITE/BLUE	GND
WHITE/BROWN	RX
BROWN	TX

LED STATUS	SENSOR STATUS
OFF	POWER OFF
FLIKER	WORK PROPERLY
ON	ABNORMAL

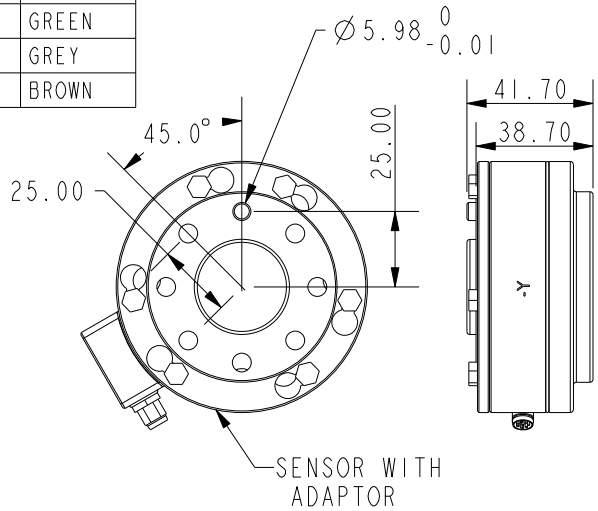

SPECIFICATIONS	
EXCITATION MAX. (V)	+24V
CROSSTALK (%F.S.)	2
NON-LINEARITY (%F.S.)	0.5
HYSTERESIS (%F.S.)	0.5
OPERATING TEMP. RANGE (°C)	-40 TO +100
COMPENSATED TEMP. RANGE (°C)	10 TO 70
MASS (KG) NOT INCLUDING ADAPTOR	0.4

	Fx	Fy	Fz	Mx	My	Mz
CAPACITY (N/Nm)	200N	200N	200N	20Nm	20Nm	20Nm
OVERLOAD CAPACITY	1000N	1000N	1000N	100Nm	100Nm	100Nm

SUNRISE INSTRUMENTS

www.srisensor.com

SIX AXIS CIRCULAR LOAD CELL
D83MM, ETHERCAT OUTPUT

UNLESS OTHERWISE SPECIFIED DIMENSIONS ARE IN MM

M4313S2C4C

REV. A