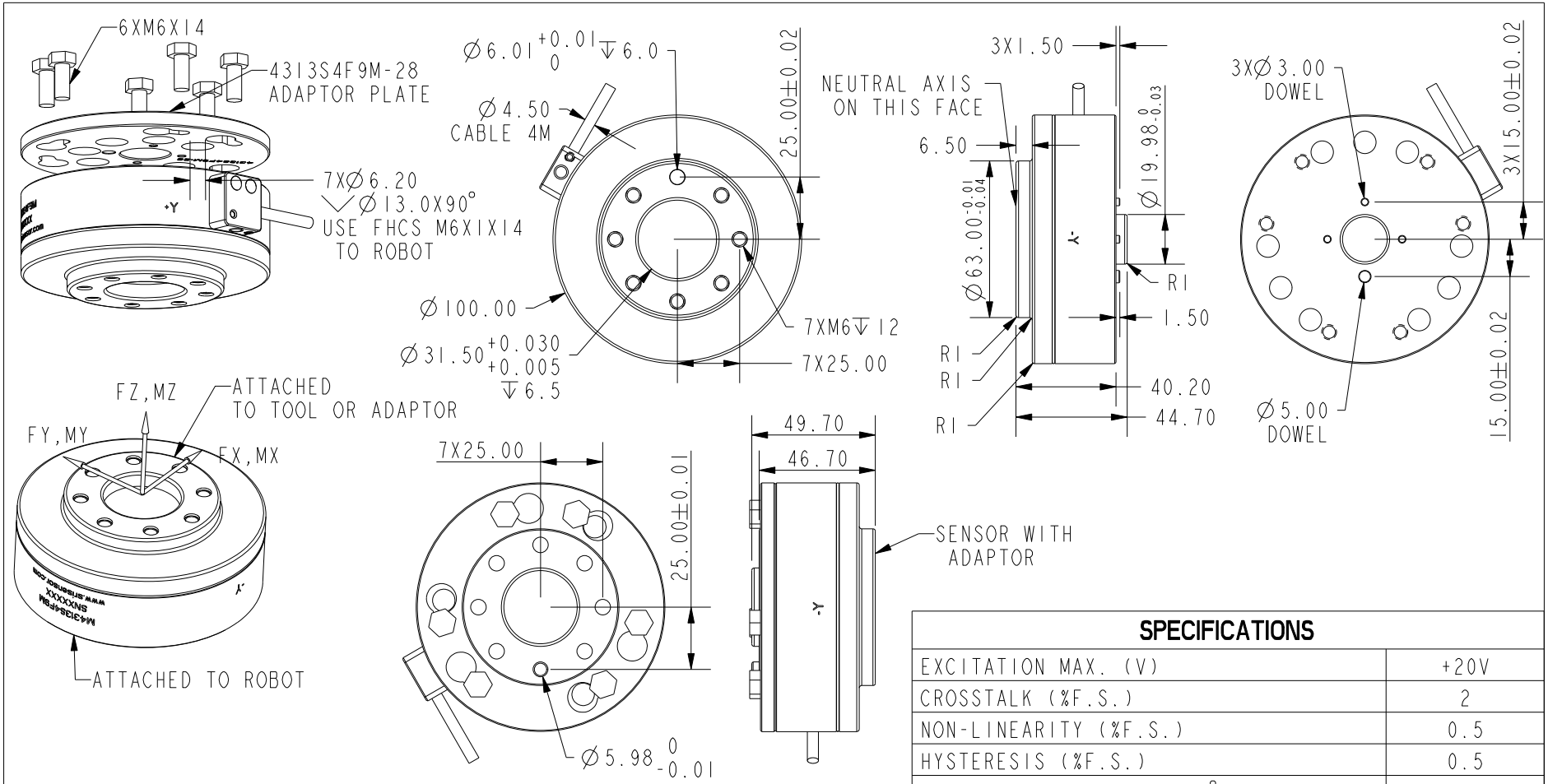

WIRING CODE - TWISTED PAIR

FUNC	CHN1	CHN2	CHN3	CHN4	CHN5	CHN6	CHN7	CHN8	CHN9
+SIG	WT(BN)	OG(BN)	BL(BN)	YL(BN)	RD(BN)	WT(BK)	OG(BK)	BL(BK)	YL(BK)
-SIG	BN(WT)	BN(OG)	BN(BL)	BN(YL)	BN(RD)	BK(WT)	BK(OG)	BK(BL)	BK(YL)
+EXC	RD(BK)								
-EXC	BK(RD)								

WT=WHITE, BN=BROWN, OG=ORANGE, BL=BLUE, YL=YELLOW, RD=RED,
BK=BLACK, "WT(BN)" = WHITE CABLE IN WHITE/BROWN PAIR

	Fx	Fy	Fz	Mx	My	Mz
CAPACITY (N/Nm)	600N	600N	600N	120Nm	120Nm	120Nm
OVERLOAD CAPACITY	3000N	3000N	3000N	300Nm	300Nm	300Nm

SPECIFICATIONS

EXCITATION MAX. (V)	+20V
CROSSTALK (%F.S.)	2
NON-LINEARITY (%F.S.)	0.5
HYSTERESIS (%F.S.)	0.5
OPERATING TEMP. RANGE (°C)	-40 TO +100
COMPENSATED TEMP. RANGE (°C)	10 TO 70
FREE AIR RESONANT FREQ. (Hz)	600
MASS (KG) NOT INCLUDING ADAPTOR	1.395

SUNRISE INSTRUMENTS

www.srisensor.com

SIX AXIS CIRCULAR LOAD CELL
D100MM, ANALOGMV OUTPUT

UNLESS OTHERWISE SPECIFIED
DIMENSIONS ARE IN MM

M4313S4F9M

REV. 0.2