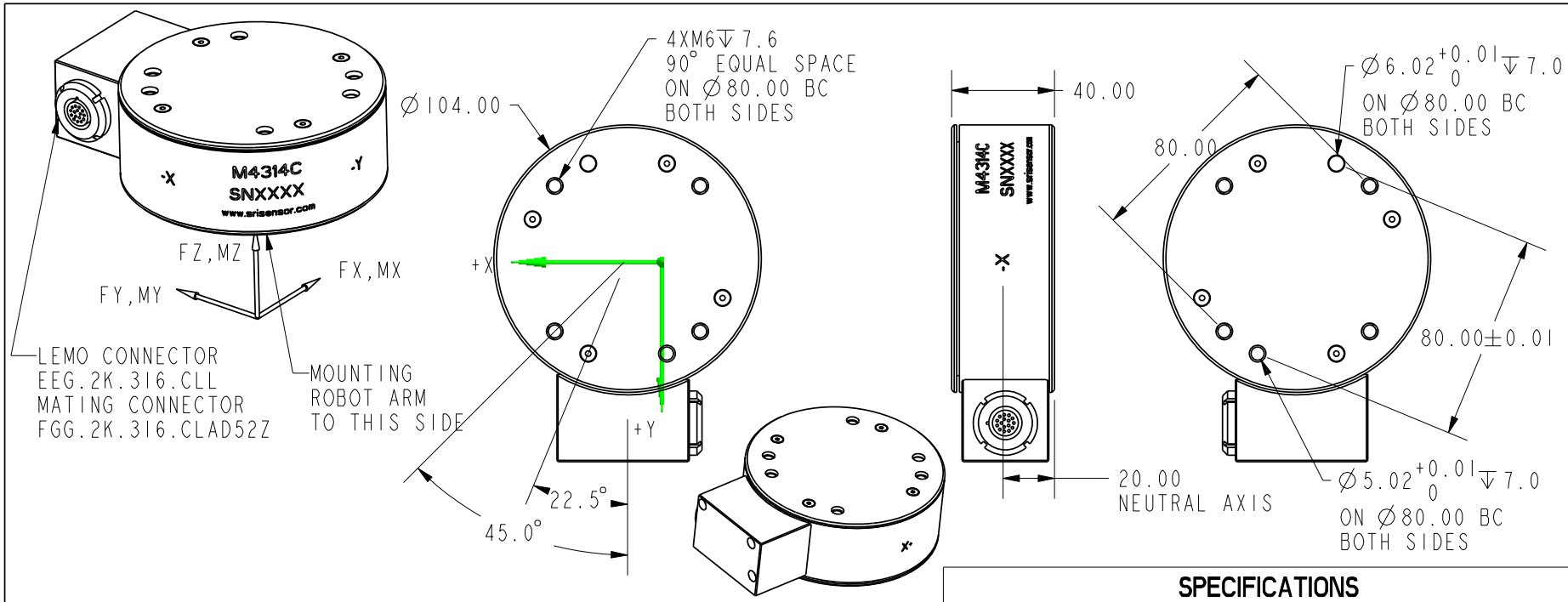

THE OUTPUT IS POSITIVE WHEN THE LOAD IS APPLIED TO THE TOOL SIDE PER COORDINATE AS SHOWN. ALL CHANNELS ARE STRUCTURALLY DECOUPLED EMBEDDED AMPLIFIER INLCUDED.

	Fx	Fy	Fz	Mx	My	Mz
CAPACITY (N/Nm)	660	660	1980	60	60	60
OUTPUT @ F.S.(V)	5	5	5	5	5	5
RESOLUTION (N/Nm)	0.09	0.09	0.33N	0.008	0.008	0.008

RESOLUTION IS DEFINED WITH VISIBLE CHANGE WHEN MINIMUM LOAD IS QUICKLY APPLIED OR REMOVED AT 200 HZ SAMPLING RATE WITH INTERFACE BOX M8128C6

LEMO PIN ASSIGNMENT

PIN #	FUNCTION	PIN #	FUNCTION	PIN #	FUNCTION
1 & 2	GND	7	+FY	12	-MX
3	+15V	8	-FY	13	+MY
4	-15V	9	+FZ	14	-MY
5	+FX	10	-FZ	15	+MZ
6	-FX	11	+MX	16	-MZ

SPECIFICATIONS

POWER SUPPLY (V)	±15V
OVERLOAD CAPACITY (%F.S.)	1000
LOWEST FREE AIR RESONANT FREQ. (HZ.)	1200
CROSSTALK - NO ADJUSTMENT (%F.S.)	5
CROSSTALK - WITH ADJUSTMENT (%F.S.)	2.5
NON-LINEARITY (%F.S.)	1.0
HYSTERESIS (%F.S.)	1.0
OPERATING TEMP. RANGE (°C)	-40 TO +90
COMPENSATED TEMP. RANGE (°C)	10 TO 70
MASS (KG)	1.7

SUNRISE INSTRUMENTS

www.srisensor.com

SIX AXIS LOADCELL WITH OL STOPS & AMP
D104MM F660N, IP65

UNLESS OTHERWISE SPECIFIED DIMENSIONS ARE IN MM

M4314C

REV. A