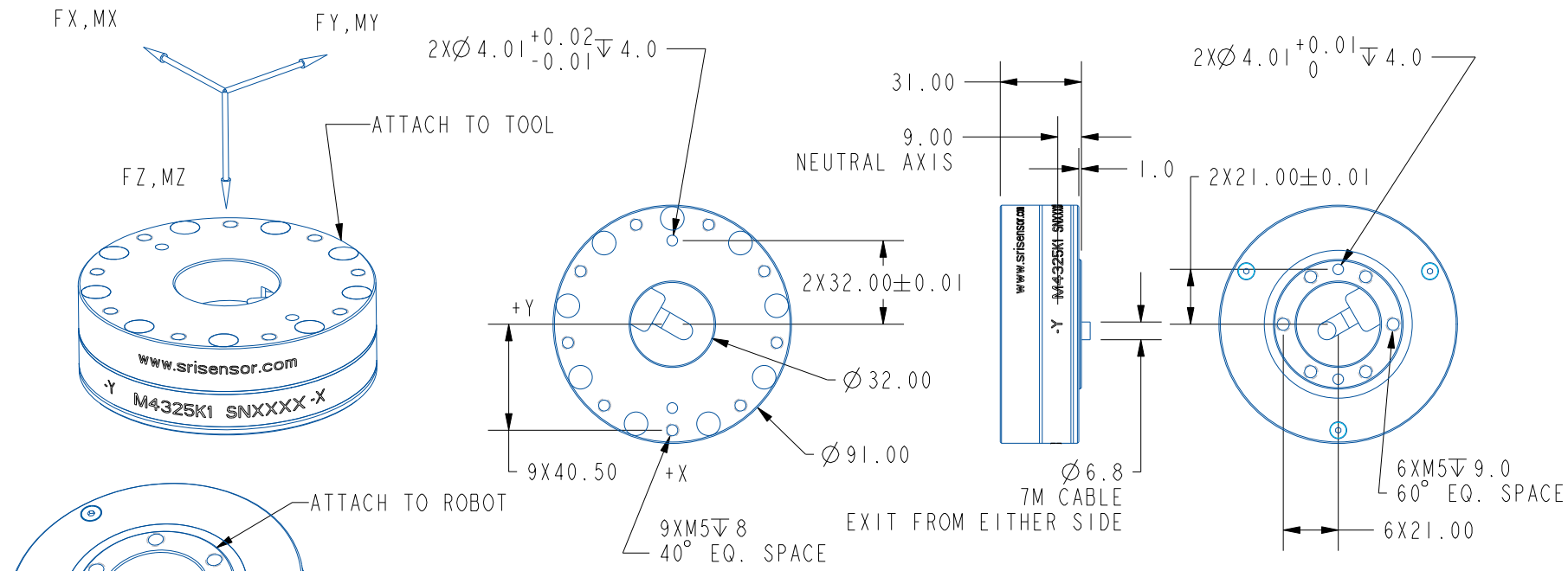

POSITIVE OUTPUT WHEN THE LOAD IS APPLIED TO THE TOOL SIDE PER COORDINATE SYSTEM AS SHOWN

THE OUTPUTS ARE NOT STRUCTURALLY DECOUPLED A 6X6 DECOUPLED MATRIX IS PROVIDED TO OBTAIN EACH COMPONENT

	Fx	Fy	Fz	Mx	My	Mz
CAPACITY (N/Nm)	200	200	400	20	20	20
OUTPUT (mV/V)	COUPLED					
BRIDGE RES. (Ω)	350	350	350	350	350	350

WIRING CODE - TWISTED PAIR, SHIELD TO SENSOR BODY

FUNC	CHN1	CHN2	CHN3	CHN4	CHN5	CHN6
+SIG	YEL(WHITE)	GREEN(WHITE)	RED(WHITE)	ORG(WHITE)	BLUE(WHITE)	YEL(BLACK)
-SIG	WHITE(YEL)	WHITE(GREEN)	WHITE(RED)	WHITE(ORG)	WHITE(BLUE)	BLACK(YEL)
PWR 24V	ORG(BLACK) + BLACK(ORG) + BLUE(BLACK)					
GND	GREEN(BLACK) + BLACK(GREEN) + RED(BLACK) + BLACK(RED)					

"YEL"="YELLOW", "ORG"="ORANGE", "RED(WHITE)" = RED CABLE IN RED/WHITE PAIR

SPECIFICATIONS

POWER SUPPLY (V)	5V
OVERLOAD CAPACITY (%F.S.)	400
FREE AIR RESONANT FREQ. (HZ.)	1500
CROSSTALK (%F.S.)	2.5
NON-LINEARITY (%F.S.)	0.5
HYSTERESIS (%F.S.)	0.5
OPERATING TEMP. RANGE (°C)	-40 TO +100
COMPENSATED TEMP. RANGE (°C)	10 TO 70
MASS (KG)	0.56

SUNRISE INSTRUMENTS
www.srisensor.com

SIX AXIS CIRCULAR LOAD CELL, COUPLED
D91MM F200N, ANALOG OUTPUT, IP65

UNLESS OTHERWISE SPECIFIED DIMENSIONS ARE IN MM

M4325K1

REV. A