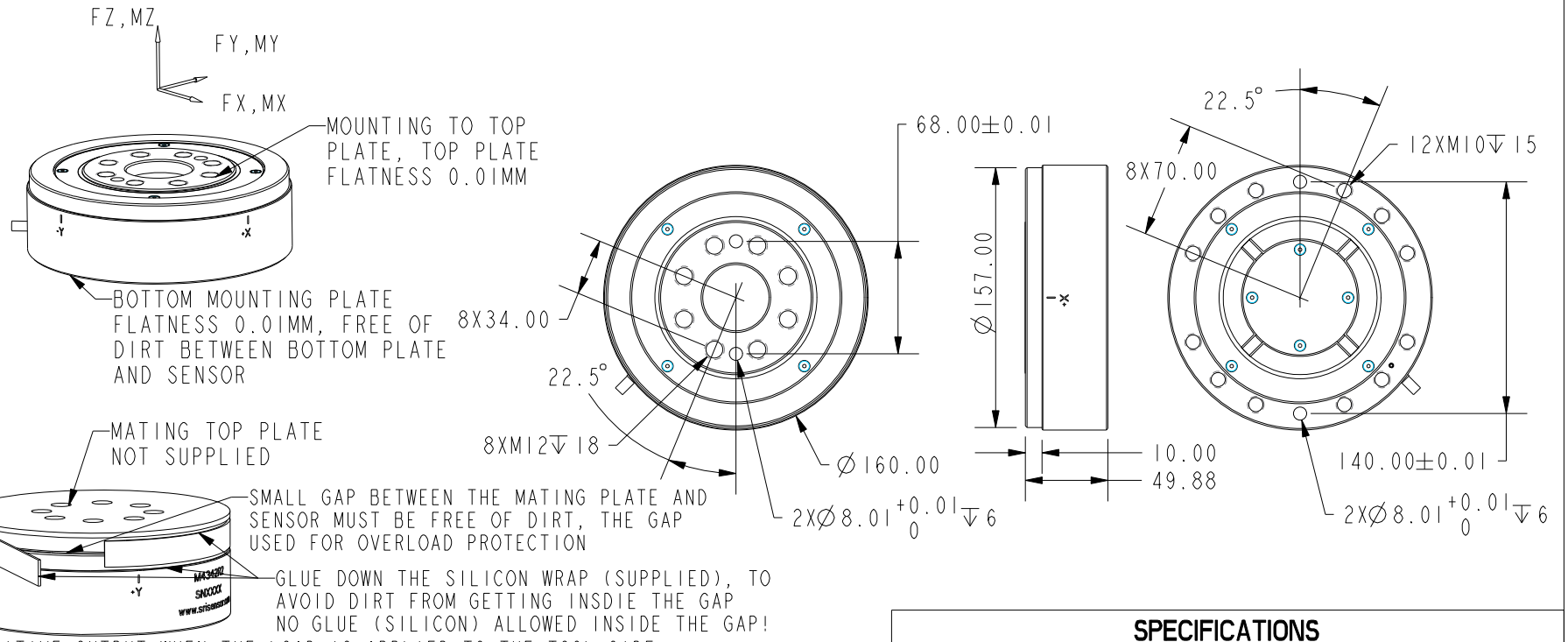

POSITIVE OUTPUT WHEN THE LOAD IS APPLIED TO THE TOOL SIDE PER COORDINATE SYSTEM AS SHOWN

OVERLOAD CAPACITY: FZ & MX & MY - 10 TIMES
FX & FY & MZ - 4 TIMES

	Fx	Fy	Fz	Mx	My	Mz
CAPACITY (N/Nm)	30000	30000	30000	3000	3000	3000
BRIDGE RES. (Ω)	350	350	350	350	350	350

SPECIFICATIONS

EXCITATION (V)	5V (TYP)
OVERLOAD CAPACITY (%F.S.)	SEE NOTE
FREE AIR RESONANT FREQ. (HZ.)	4000
CROSSTALK (%F.S.)	2.0
LINEARITY (%F.S.)	0.5
HYSTERESIS(%F.S.)	0.5
OPERATING TEMP. RANGE (°C)	-40 TO +100
COMPENSATED TEMP. RANGE (°C)	10 TO 70
MASS (KG)	5.9

WIRING CODE - TWISTED PAIR

FUNC	FX	FY	FZ	MX	MY	MZ
+SIG	WHITE(BROWN)	ORG(BROWN)	BLUE(BROWN)	YEL(BROWN)	RED(BROWN)	WHITE(BLACK)
-SIG	BROWN(WHITE)	BROWN(ORG)	BROWN(BLUE)	BROWN(YEL)	BROWN(RED)	BLACK(WHITE)
+EXC	ORG(BLACK)	BLACK(ORG)	BLUE(BLACK)	BLACK(BLUE)	RED(BLACK)	BLACK(RED)
-EXC	YELLOW(BLACK)			BLACK(YELLOW)		

"YEL"="YELLOW", "ORG"="ORANGE", "WHITE(BROWN)" = WHITE CABLE IN WHITE/BROWN PAIR

SUNRISE INSTRUMENTS
www.srisensor.com

SIX AXIS CIRCULAR LOAD CELL
D150MM F30KN, IP65

UNLESS OTHERWISE SPECIFIED DIMENSIONS ARE IN MM

M4342R2

REV. A